webra

	order No.
T4/40	1043 RC, 1044 RC
T4/60	1046 RC
T4/80	1048 RC

OPERATING INSTRUCTIONS

Thank you for purchasing one of many fine WEBRA engines. Please read the following instructions carefully in order to understand and enjoy your engine.

GENERAL FEATURES

- Extremely low noise level
- High torque results in enormous pulling power
- Easy start, hot or cold engine
- Low idle capability
- Will stand very high rpm figures
- Excellent throttle capabilities in all rpm ranges
- Maintenance free valve system
- Low vibration level
- Sturdy design

TECHNICAL DATA:

		T 4/40	T 4/60	T 4/80
Displacement	ccm	6,5	9,95	13,2
Bore	mm	21,0	24,0	25,5
Stroke	mm	18,6	22,0	26,0
Weight	g	380	600	640
Power	HP	0,61	0,95	1,15
Valve system		------- Drum valve ----------		
Carburetor		------- TN- 2 needle ----------		
Intake O	mm	4,5	6,0	6,5
Cylinder Assy		---------- A B C D ----------		
Propnut thread		1/4"	M8(metric)	M8 (metric)
Practical rpm range T4/40/60/80		------ 2000 - 11000 ----------		

(A = aluminium piston
B = brass cylinder
C = chrome coating of the cylinder
D = Dykes L-shaped piston ring)

IMPORTANT

ALWAYS USE SILENCER
THE CARBURETOR HAS BEEN PRE-ADJUSTED AT THE FACTORY
DON'T CHANGE NEEDLE SETTINGS BEFORE STARTING THE ENGINE
ALWAYS CHECK WHETHER PROP NUT IS SECURELY TIGHTENED
IF IT IS NOT TIGHTENED THE PROP MIGHT COME LOOSE
DANGER: INJURY MAY RESULT !
FUEL TANK SHOULD ALWAYS BE IN LINE WITH CARBURETOR

INSTALLATION

Install engine securely on metal engine mount using M 4 screws and locknuts. Makre sure that the mounting holes line up on order to avoid distortion of the crankcase.
WEBRA fourstroke engines can be mounted in any position without problems. Make sure that the breather nipple at the front part of the crankcase is unobstructed. This nipple is NOT supposed to be used as pressure nipple to pressurize the fuel tank!

SILENCER:

The enclosed silencer consits of an expansion chamber with built in pressure nipple and a header pipe. Both parts have to be screwed together securely.
Carefully screw the header pipe into the cylinder head. Pay attention that the header pipe is NOT not pressing against the drum valve mechanism. If necessary unscrew one turn and counterlock with nut.

FUEL RECOMMENDATION

Use only quality fuel made out of premium and fresh components.

SYNTHETIC OIL	10-15 %	or
CASTOR OIL	15-20 %	(RUBBERFREE, FIRST PRESSING, CHEMICAL NEUTRAL)
METHANOL	90-70 %	(99,9% PURITY and WATERFREE)
NITROMETHANE	5-10 %	

GLOWPLUG:

Prefer long glowplugs, no idle bar. Hot glowplugs will achieve a better idle with slighty lower top performance.
A colder glowplug will give you a better top performance but the idle will be slighty higher.

RECOMMENDED PROPELLER:

Prefer glass filled nylon or fiberglass propellers because heavier props act like a flywheel providing less vibration and smoother running. Propellers should always be balanced and free from dents, cracks or breaks. It is extremely dangerous to run such a prop.

T4/40: 10x6, 11x5, 10x7, 12x4
T4/60: 11x7,5,11x8, 12x5, 12x6
T4/80: 12x6, 12x8, 13x6, 14x6, 11x7,5 (3bladed prop)

Big diameter and low pitch propellers are recommended for slow flying airplanes. Small diameter and high pitch for faster flying airplanes.
ATTENTION MAKE SURE THAT NOBODY STANDS IN LINE WITH THE ARC OF THE PROPELLER WITH ENGINE RUNNING!

FUELTANK:

Four stroke engines are more economical to operate than two stroke of equal displacement. 7 -9 oz tank is recommended. The fueltank should be installed as close as possible to the engine. It is necessary to use exhaust pressure to pressurize the fueltank. This ensures maximum performance and reliable running characteristics. Make sure that fuel flow is unrestricted due to crimped tubing or any other blockages. After "hard landings" it may occur that the clunk in the tank came loose. Also it sometimes happens that small cuts are in the fuel line where it attaches to the fuel tank tubing. This will show inconsistent running of the engine, difficulty in adjusting the carburetor, and sudden stops after a short run.

STARTING PROCEDURE:

1. Fill up fuel tank with appropriate fuel.
2. To choke the motor close exhaust with fingertip and turn the engine counterclockwise a couple of times. (Exhaust pressure forces fuel into the carburetor).
3. Turn the prop, without glowplug connected, a couple of times in order to check whether the engine is flooded or turns freely. Too much fuel can cause dangerous backfiring or result in serious internal damage. By turning the propeller clockwise, excessive fuel can be removed from the cylinder.
4. Close the throttle till only a small gap can be seen (idle position).
5. The needle settings of the carburetor are preset by the factory. AVOID ACCIDENTAL CHANGING OF NEEDLE VALVE SETTING BEFORE STARTING THE ENGINE.
6. Connect glowplug with starting battery (1,5 Volts) and flip prop clockwise, against running direction. Withdraw fingers rapidly to avoid being hit by the turning prop.
7. If the engine will not start after several attempts, check whether the glowplug is glowing brightly, and if fuel is reaching the carburetor.
8. An even easier way to start the engine is to apply an electric starter. Make sure to use an appropriate starter cone which will center the electric starter while turning.

IMPORTANT: Before using an electric starter check if there is too much fuel in the cylinder, by turning the prop by hand with disconnected glow-plug. As liquids cannot be compressed the engine could be destroyed while trying to start it with too much fuel in the cylinder!

9. After starting the engine, open the throttle slowly. Give the engine time to warm up.
10. Disconnect glowplug carefully. Pay attention and maintain clearance between propeller and any objects like rags, stones, glowplug wiring.

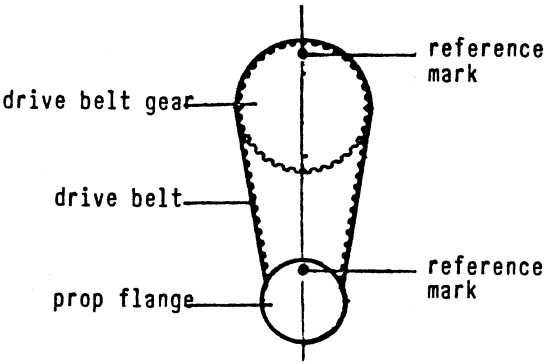

When you dismantle the engine please note:
To set the right timing for the four stroke system the reference marks have to be in top position. The performance may be better if you offset the top reference mark one tooth clockwise or counter-clockwise.

SPARE PART LIST	1043RC (T4/40R)	1044 RC (T4/40)	1046 RC (T4/60)	1048 RC (T4/80)
crankcase	1044/1	1044/1	1046/1	1048/1
cover plate	1044/2	1044/2	1046/2	1046/2
piston ring	1044/4A	1044/4A	1046/4A	1048/4A
ABCD-cylinder assembly	1044/34S	1044/34S	1046/34S	1048/34S
connecting rod	1019/6	1019/6	1046/6	1027/6
piston ring	1044/7	1044/7	1046/7	1048/7
crank shaft	1044/8	1044/8	1046/8	1048/8
cylinder head	1043/10	1044/10	1046/10	1046/10
O-ring head valve	1044/10C	1044/10C	1046/10C	1046/10C
cylinder head right run	1043/10R	1044/10R	-	-
prop flange	1044/15	1044/15	1046/15	1046/15
key	1019/15A	1019/15A	1020/15A	1020/15A
prop washer	1022/19	1022/19	1037/19	1037/19
prop nut	1020/20	1020/20	1037/20	1037/20
gasket set	1044/21	1044/21	1046/21	1046/21
front ball bearing	1044/251	1044/251	1046/251	1046/251
rear ball bearing	1020/251	1020/251	1046/252	1046/252
screw-set	1044/26	1044/26	1046/26	1048/26
drive belt gear	1044/53	1044/53	1046/53	1046/53
key for drive belt gear	1044/54	1044/54	1046/54	1046/54
screw for drive belt gear	1044/55	1044/55	1046/55	1046/55
drive belt	1044/56	1044/56	1046/56	1048/56
drive belt cover	1044/57	1044/57	1046/57	1048/57
suction pipe	1043/58	-	1046/58	1048/58
carb. mount	-	-	1046/59	1046/59

W E B R A

OPERATING INSTRUCTIONS

Congratulations on the purchase of your Webra model engine!
Robust, powerful and efficient - these are the attributes of all engines produced by the most successful manufacturers in Germany and Austria. Our claims of quality and performance are underlined by numerous victories at world championships and other large competitions.
Webra model engines are strong and utterly reliable.
We manufacture inexpensive, glow-ignition, cross scavenged engines. For better performance, we make the "Speed" series which are Schnürle ported.
All Webra engines are precision machines and should be handled with care. The following recommendations will give you all necessary mounting and adjustment details.
The full inventory of spare parts for your engine can be found in the large Webra catalogue which can be purchased from your dealer.

GENERAL INFORMATION (MOUNTING AND STARTING)

1. Engine Installation
The engine should be mounted firmly in the model so that it cannot vibrate. An aluminium engine mount is recommended and the engine should be bolted to this mount using the following bolt sizes:- (Metric Thread)

M 3,5 - Speed 90, 61, 40 Webra 61 Blackhead
M 3 - Webra 40 Blackhead
M 2,6 - The Speedy

If the engine is rear mounted, the mounting bolts must enter the crankcase to a depth of at least 8 mm.
For technical reasons, side flange mounting is preferable to rear mounting.

2. Tank positioning
The centre of the tank should be level with the centre line of the carburettor, and as close as possible to the engine. To prevent fuel foaming wrap the tank in sheet sponge rubber. Choose a tank which can be pressured, by connecting fuel tubing from the pressure nipple on the silencer to the tank. In the case of the Pylon 40 take the pressure from the crankcase. Ensure that the pressure system is sealed.

3. Running-in
Mount the engine in the model, using the correct propeller (see Table A). The running-in fuel mixture should contain at least 20 % oil (maximum 30 %).

4. Operation of Engine
On the ground run at least one tank of fuel through the engine. Set the high speed needle so that the engine is "2-stroking" and set the idle needle so that the idling speed is approx. 4 - 5000 r. p. m. Put the model in the air, gradually weakening the mixture until sufficiently "lean" to enable the engine to "peak" at full throttle.
The piston ring/liner surfaces are extremely hard and the engine will not be fully run-in until it has been used for many hours.

5. Starting the engine
Inject a few drops of fuel into the carburettor air intake. Prime the engine by turning the propeller a few times anti-clockwise. Connect a battery (1,5 - 2 V) to the glow plug, the filament should glow bright-red. Flick the propeller anti-clock-wise as quickly as possible until the engine fires. Should the engine start, run at high speed - then stop, open the needle valve one full turn and repeat the starting procedure.
Should the engine start, run at low speed - then stop, close the needle valve onefull turn and repeat the starting procedure.
To stop the engine disconnect the fuel supply.

IF AN ELECTRIC STARTER IS USED TAKE CARE TO ENSURE THAT THERE IS NO EXCESS FUEL IN THE ENGINE! THIS CAN PERMANENTLY DAMAGE YOUR ENGINE

6. Engine Maintenance
Do not permit foreign bodies to enter the engine. If this should happen, remove the cylinder head and back plate and wash out with fuel or gasoline. The engine should be dismantled only when absolutely necessary. When repairs are necessary the engine should be returned to an authorised service station.
Good Luck and have fun with your Webra Engine.

OPERATING INSTRUCTIONS FOR WEBRA DYNAMIX CARBURETTOR

The Webra Dynamix Carburettor has several advantages when compared to conventional carburettors.
1. It has an automatic mixture control which is effective across the total range from idling to full throttle. The oftimum mixture is therefore supplied to the engine for each throttle position.
2. An accelerator pump injects fuel when required. This effects very fas acceleration and increases the reliability of the engine.
3. The carburettor throat is not restricted by a barrel or spray bar and in consequence fuel injection is better which improves the engine performance.
4. The carburettor slide is controlled via a universal ball joint. This is infinitely adjustable and permits easy connection of the servo control rod.
5. After removing the control rods, the carburettor can be detached and cleaned without interfering with its adjustment.

THE WEBRA DYNAMIX CARBURETTOR MUST BE OPERATED IN CONJUNCTION WITH A PRESSURED FUEL TANK OR WITH A FUEL PUMP. IT WILL NOT OPERATE BY VENTURI ACTION.

ADJUSTMENT OF THE DYNAMIX CARBURETTOR

(See illustration of carburettor in German leaflet).

1. Set the throttle lever (3) so that at full throttle the hole in the throttle slide is fully exposed to the cross section of the carburettor. At idle this hole should be closed except for a gap of 0,3 - 0,5 mm. Lengthening the throttle lever (3) decreases the throttle slide travel, shortening the lever increases the slide travel.

2. Open the high speed needle (1) between 6 - 8 turns and start the engine with the throttle half open. After a few seconds warming up, open the throttle fully and adjust the needel (1) to give a high r. p. m. Do not make the mixture too lean - this will damage the engine.

3. Final idling adustment can only be done after the engine has been completely run-in.

The carburettor has been preset in the factory but may need slight adjustment. Adjustment is made to the low speed needle (2) which is on the end of the throttle slide.

Turn knurled screw clockwise to richen the idling mixture.

Turn kurled screw anti-clockwise to weaken the idling mixture.

ADJUSTMENT OF THE WEBRA TN CARBURETTOR

(See illustration of carburettor in German leaflet)

To understand the principles of the WEBRA 61 RC TN Carburettor it is essential to understand that:-

- The high speed needle (1) regulates the full throttle mixture only
- The low speed needle (2) regulates the idling mixture only
- The cone of the low speed needle (2) regulates the mid range mixture

The primary advantage of this carburettor system is that the level of fuel in the tank cannot effect the setting of the idle needle.

1. Check the setting of the idle needle (2) by rotating the throttle lever (4), which turns the barrel inside the carburettor body, until there is only a very small gap left open in the air intake throat.

2. Using a jeweller´s screwdriver, carefully screw the low speed needle (2) in as far as it will go. Unscrew this needle (2) by two full turns.

3. Open the throttle lever (4) fully. Start the engine in accordance with the operating instructions and adjust by needle (1) to maximum speed.

4. After the engine has warmed up, throttle back to approx. 3000 r.p.m. and set the throttle stop screw (3) to this speed. If at this setting the revs graudally drop then the mixture is too rich and needle (2) should be screwed in slowly until the engine speed is constant. If the engine stopf or falters during change over to full throttle then the mixture is too weak and the idle needle (2) should be screwed out a little.

Finally adjust the throttle stop screw (3) to obtain the desired idling speed.

5. The guide screw(s) with its lock-nut serves as a lateral guide for the throttle barrel.

ADJUSTMENT OF THE WEBRA CARBURETTOR TN 20

(See illustration in German leaflet)

To understand the principle of the WEBRA RC TN Carburettor it is essential to understand that:-

- The high speed needle (1) regulates the full throttle mixture only
- The low speed needle (2) regulates the idling mixture only
- The cone of the low speed needle (2) regulates the mid-range mixture

The primary advantage of this carburettor system is that the level of fuel in the tank cannot effect the setting of the idle needle.

1. Check the setting of the idle needle (2) by rotating the throttle lever (4), which turns the barrel inside the carburettor body until there is only a very small gap left open in the air intake throat.

2. Using a jeweller´s screwdriver carefully screw in the low speed needle (2) as far as it will go. Unscrew this needle two full turns.

3. Open the throttle lever (3) fully. Start the engine in accordance with the operating instructions and adjust by needle (1) to maximum speed.

4. After the engine has warmed up, throttle back to approx. 3000 r.p.m. Should the revs steadily fall away then the mixture is too rich. Screw in the idle needle (2) until the engine speed remains constant. If the engine falters or stops during change over to full throttle, then the mixture is too weak and needle (2) must be unscrewed a little.

ADJUSTMENT OF WEBRA CARBURETTOR "SPEEDY"

(See illustration in German Leaflet)

Final adjustment of the idle needle is made after the engine has been run-in. First adjust the high speed needle to give maximum speed. Then close the throttle to leave a gap of approx. 0,5 mm. This gap is set by the stop screw (2). If the engine slows down or stops altogether then the air control screw (3) is unscrewed slightly. If the engine falters or stopf when being changed to full throttle then the mixture is too weak and the air control screw must be screwed in a little.

A smooth idling speed is only possible when a silencer is fitted.

ATTENTION THE SPEEDY WITHOUT AN R/C CARBURETTOR MUST BE OPERATED WITH A PRESSURE TANK

In this case fit the enclosed pressure nipple instead of one of the two upper crankcase bolts, and connect the nipple with fuel tubing to the pressure tank.

SPARE PART LIST 1048 RC (T4/80)

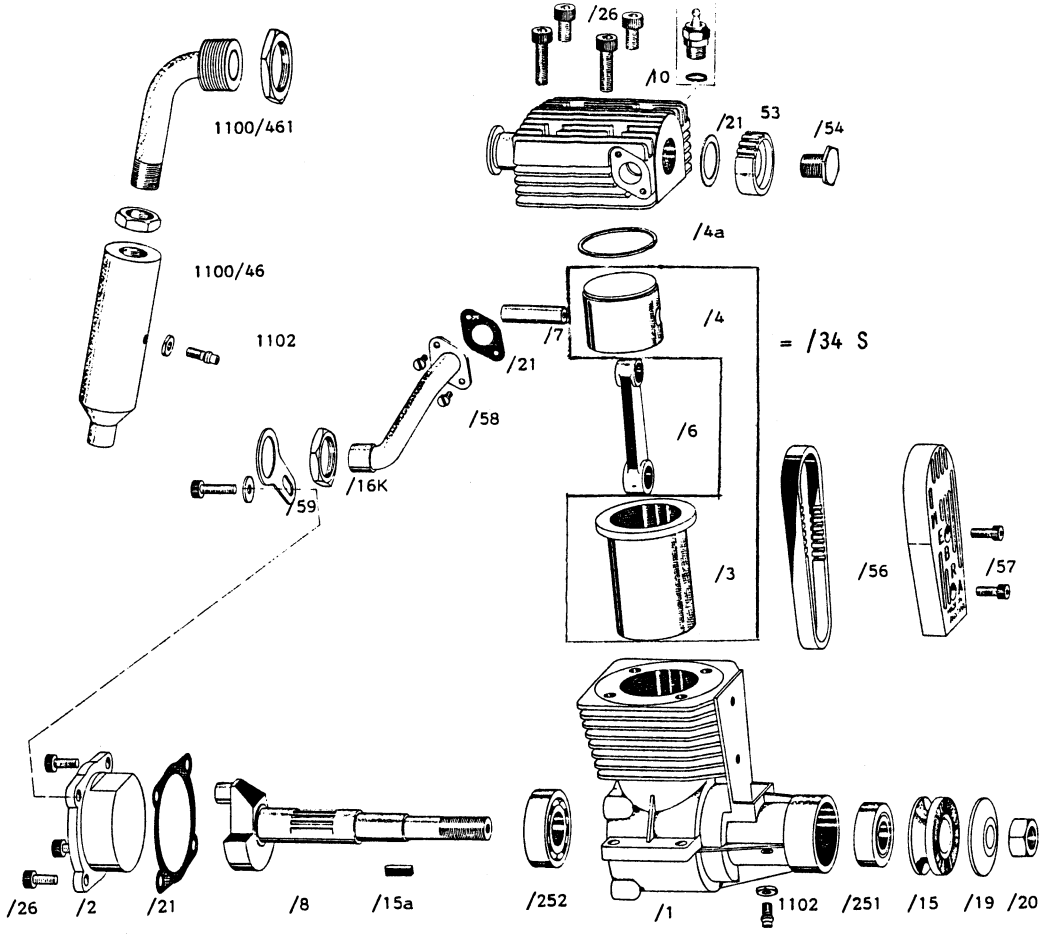

crankcase	1048/1	gasket set	1046/21
cover plate	1046/2	front ball bearing	1046/251
piston ring	1048/4 A	rear ball bearing	1046/252
ABCD-cylinder assembly	1048/34 S	screw-set	1048/26
connecting rod	1027/6	drive belt gear	1046/53
wrist pin	1048/7	key for drive belt gear	1046/54
crank shaft	1048/8	screw for drive belt gear	1046/55
cylinder head	1046/10	drive belt	1048/56
O-ring head valve	1046/10 C	drive belt cover	1048/57
prop flange	1046/15	suction pipe	1048/58
key	1020/15 A	carb. mount	1046/59
carb nut	1048/16 K	silencer	1100/46
prop washer	1037/19	manifould	1100/461
prop nut	1037/20	pressur nipple M4	1102